## Technical Specification

| | | |
|---|---|---|
| Frequency Range(GHz) | 2.20-3.30 | |
| Waveguide | WR340 | |
| Gain(dBi) | 20 Typ. | |
| Polarization | Linear | |
| 3dB Beamwidth(deg) | E Plane: | 16 Typ. |
| | H Plane: | 16 Typ. |
| Sidelobe(dB) | E Plane: | -30 Max. |
| | H Plane: | -30 Max. |
| Cross Pol. Isolation(dB) | -45 Typ. | |
| VSWR | A Type: | 1.2:1 Max. |
| | C Type: | 1.5:1 Max. |
| Output | A Type: | FDP26(UDR26) |
| | C Type: | N-Female or SMA-Female |
| Material | Al | |
| Size(mm) | A Type: | 642.7 x 642.7 x 1044.4 |
| | C Type: | 642.7 x 642.7 x 1136.4 |
| Net Weight(Kg) | A Type: | 10.0 Around |
| | C Type: | 10.5 Around |

## Outline Drawing (Size: mm)

A Type(With FDP26 Output)

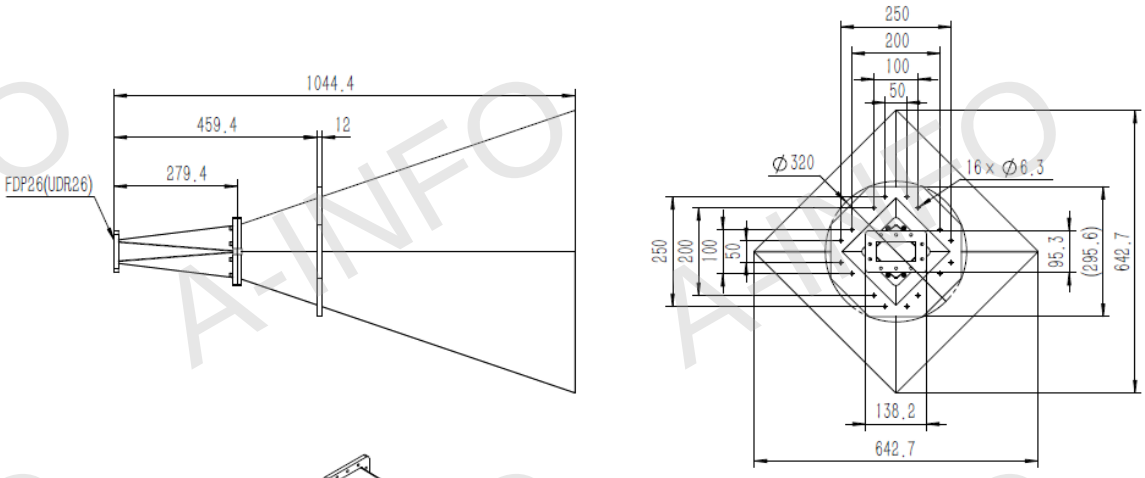


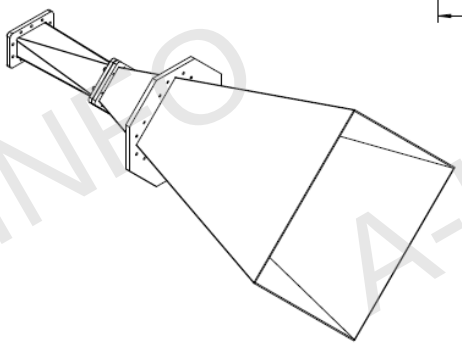


China(Beijing): Tel: (+86) 10-6266-7326, (+86) 10-6266-7327 Fax: (+86) 10-6266-7379
China(Chengdu): Tel: (+86) 28-8519-2786, (+86) 28-8519-3044 Fax: (+86) 28-8519-3068
USA : Tel: (+1) 949-639-9688, (+1) 949-639-9608 Fax: (+1) 949-639-9670
Website: www.ainfoinc.com
Email: sales@ainfoinc.com
Data subject to change without notice. For current data sheets, please contact: Sales@ainfoinc.com

## C Type (With N Type Female Output)

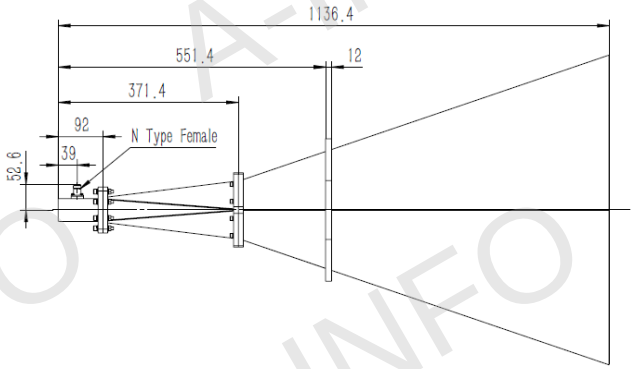


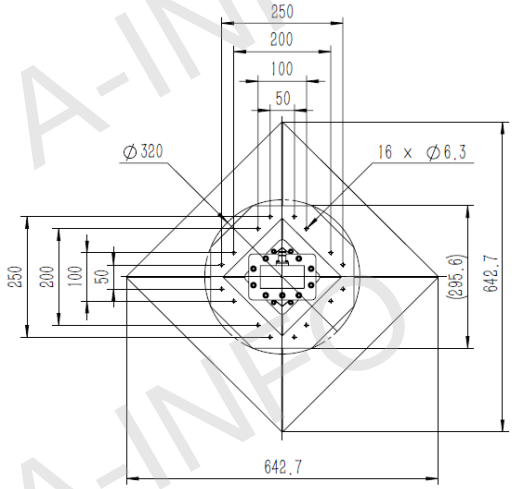


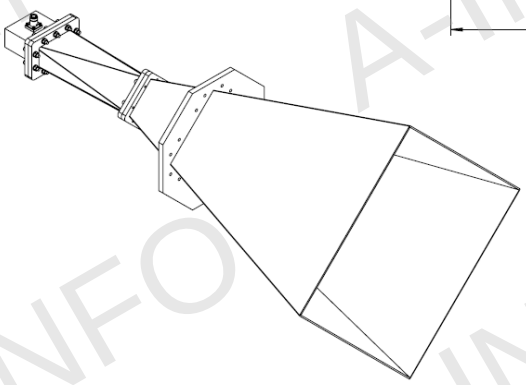

## C Type (With N Type Female Output & Round Mounting Bracket)

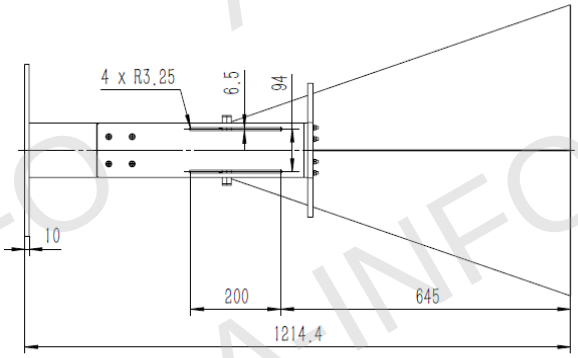


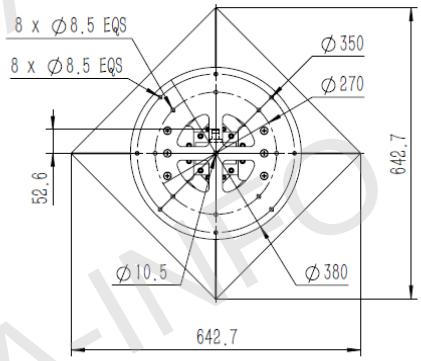


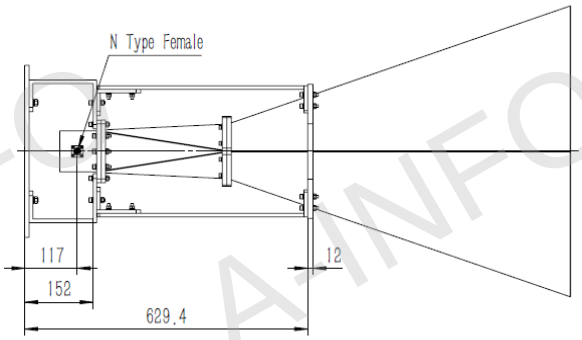


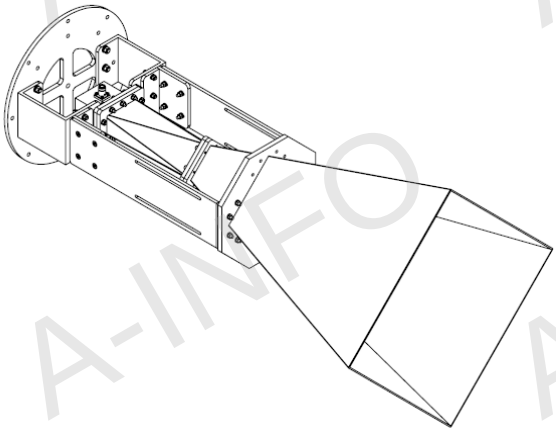


China(Beijing): Tel: (+86) 10-6266-7326, (+86) 10-6266-7327 Fax: (+86) 10-6266-7379
China(Chengdu): Tel: (+86) 28-8519-2786, (+86) 28-8519-3044 Fax: (+86) 28-8519-3068
USA : Tel: (+1) 949-639-9688, (+1) 949-639-9608 Fax: (+1) 949-639-9670
Website: www.ainfoinc.com
Email: sales@ainfoinc.com
Data subject to change without notice. For current data sheets, please contact: Sales@ainfoinc.com

C Type (With SMA Female Output)

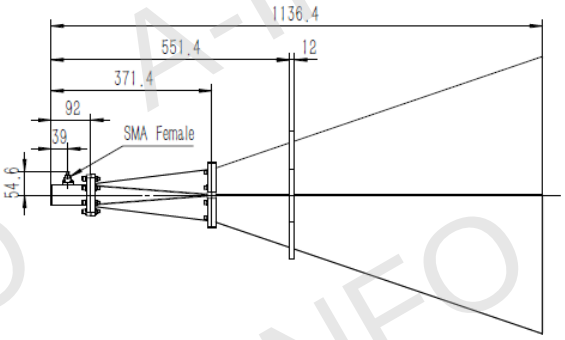


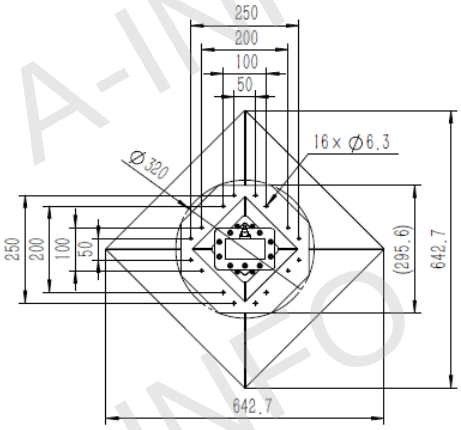


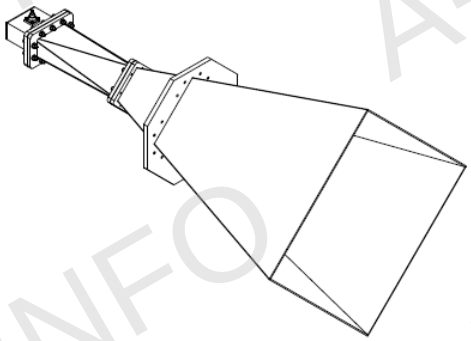

C Type (With SMA Female Output & Round Mounting Bracket)

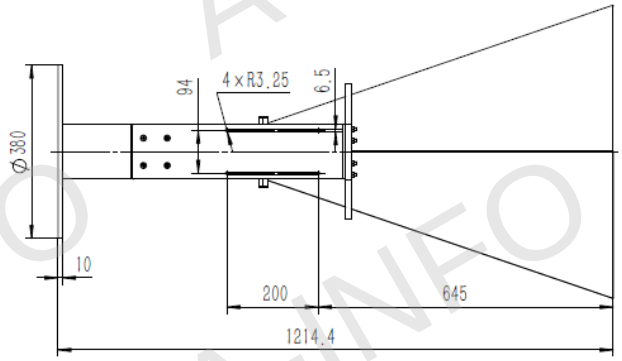


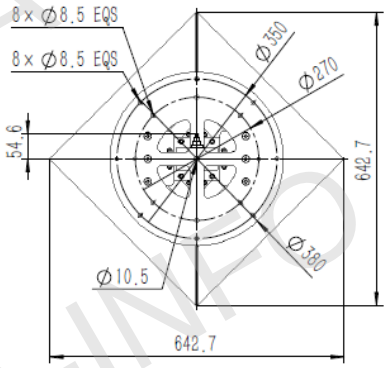


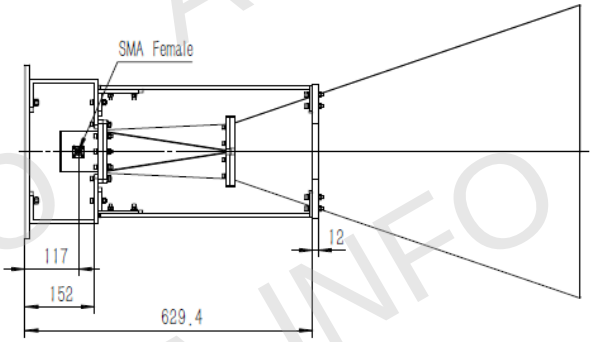


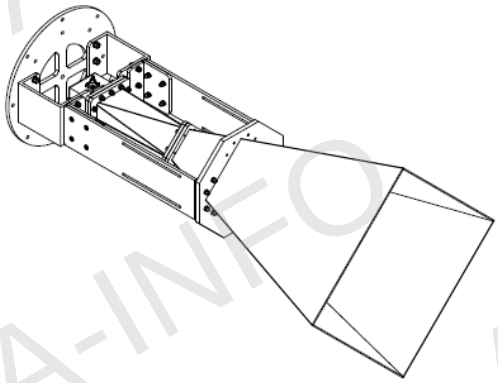


China(Beijing): Tel: (+86) 10-6266-7326, (+86) 10-6266-7327 Fax: (+86) 10-6266-7379
China(Chengdu): Tel: (+86) 28-8519-2786, (+86) 28-8519-3044 Fax: (+86) 28-8519-3068
USA : Tel: (+1) 949-639-9688, (+1) 949-639-9608 Fax: (+1) 949-639-9670
Website: www.ainfoinc.com
Email: sales@ainfoinc.com
Data subject to change without notice. For current data sheets, please contact: Sales@ainfoinc.com

## Flange Drawing (Size: mm)

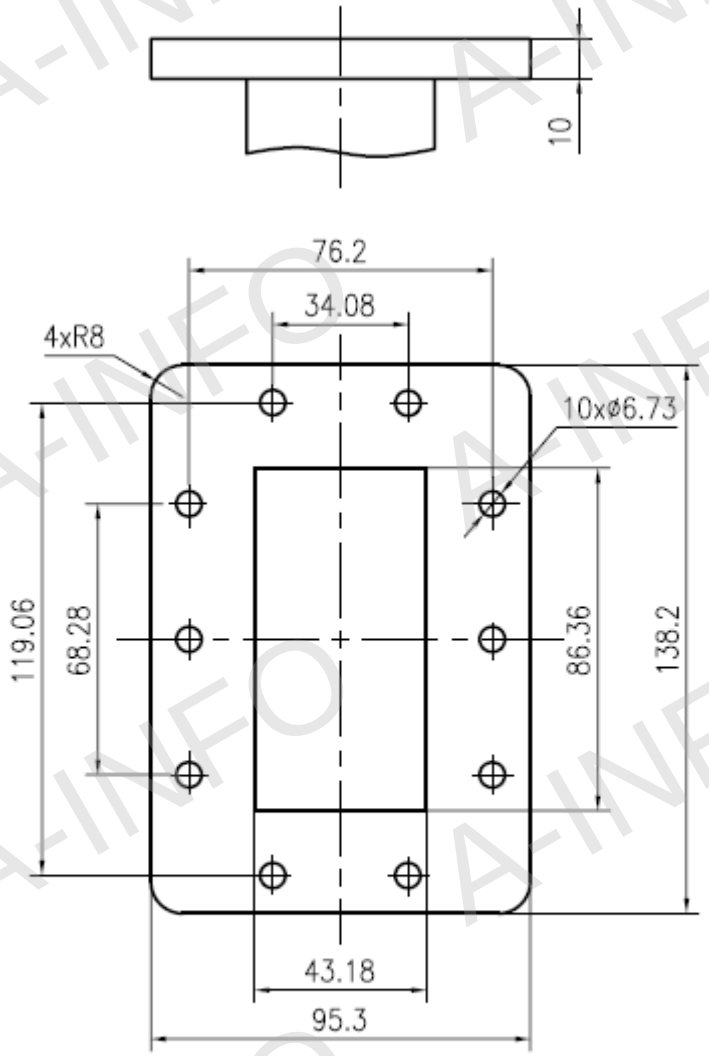


FDP26


China(Beijing): Tel: (+86) 10-6266-7326, (+86) 10-6266-7327 Fax: (+86) 10-6266-7379
China(Chengdu): Tel: (+86) 28-8519-2786, (+86) 28-8519-3044 Fax: (+86) 28-8519-3068 Website: www.ainfoinc.com
USA : Tel: (+1) 949-639-9688, (+1) 949-639-9608 Fax: (+1) 949-639-9670 Email: sales@ainfoinc.com
Data subject to change without notice. For current data sheets, please contact: Sales@ainfoinc.com

## Test Results

### 1. Gain and Antenna Factor

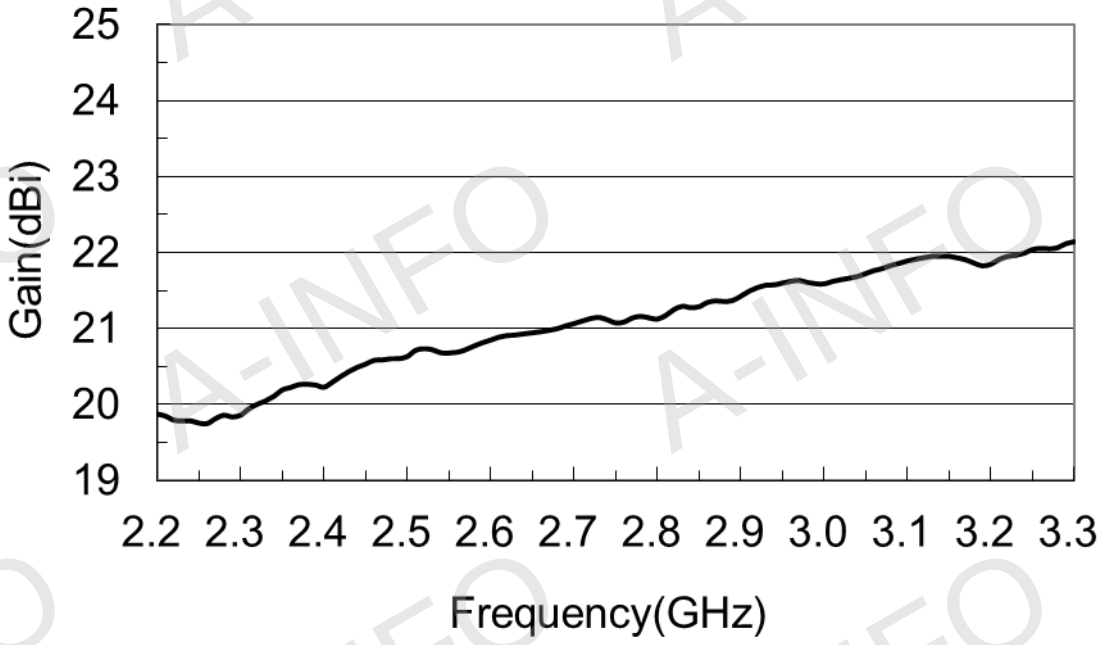


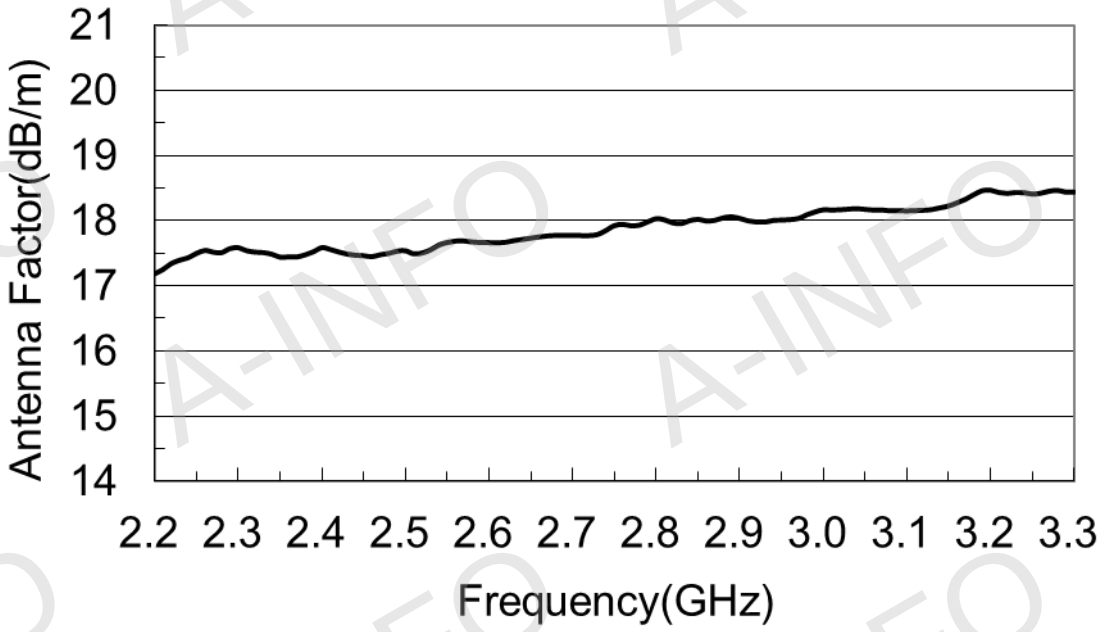



China(Beijing): Tel: (+86) 10-6266-7326, (+86) 10-6266-7327 Fax: (+86) 10-6266-7379
China(Chengdu): Tel: (+86) 28-8519-2786, (+86) 28-8519-3044 Fax: (+86) 28-8519-3068 Website: www.ainfoinc.com
USA : Tel: (+1) 949-639-9688, (+1) 949-639-9608 Fax: (+1) 949-639-9670 Email: sales@ainfoinc.com
Data subject to change without notice. For current data sheets, please contact: Sales@ainfoinc.com

## 2. VSWR

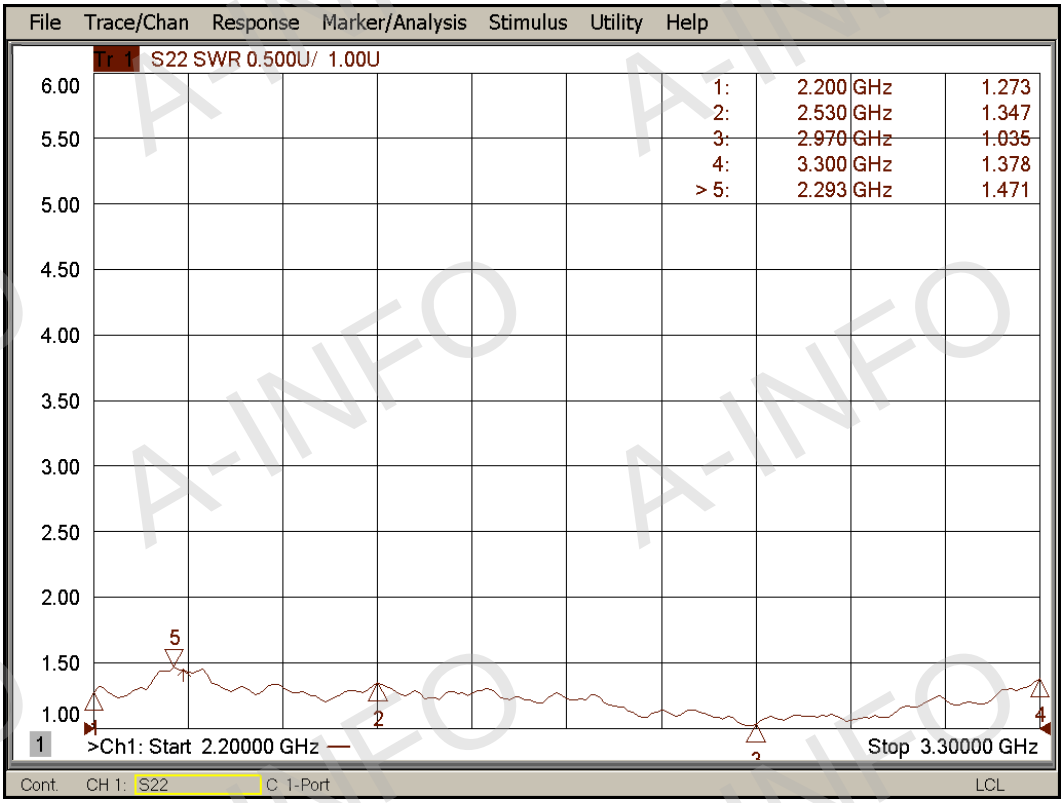


## 3. Cross Polarization Isolation

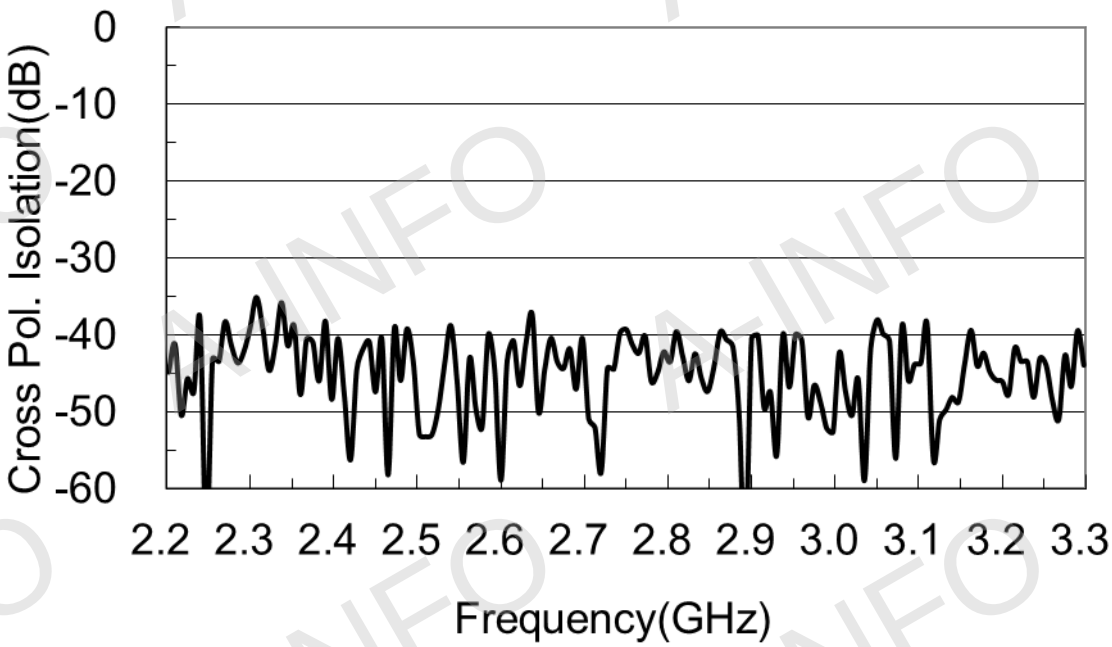



China(Beijing): Tel: (+86) 10-6266-7326, (+86) 10-6266-7327 Fax: (+86) 10-6266-7379
China(Chengdu): Tel: (+86) 28-8519-2786, (+86) 28-8519-3044 Fax: (+86) 28-8519-3068 Website: www.ainfoinc.com
USA : Tel: (+1) 949-639-9688, (+1) 949-639-9608 Fax: (+1) 949-639-9670 Email: sales@ainfoinc.com
Data subject to change without notice. For current data sheets, please contact: Sales@ainfoinc.com

## 4. Pattern

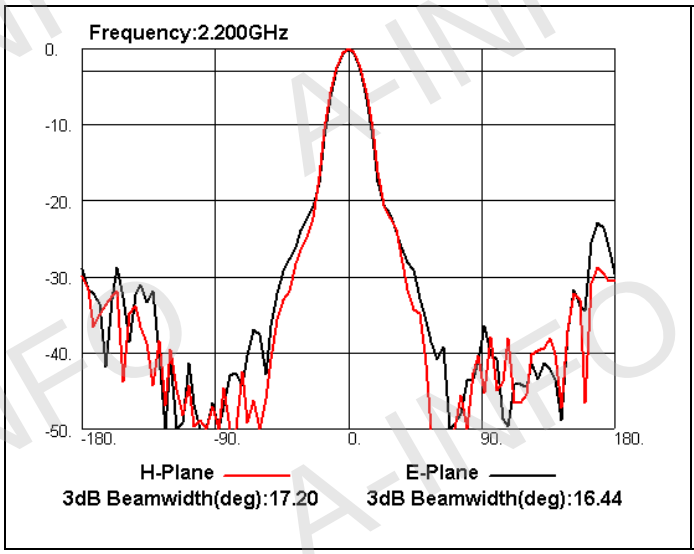


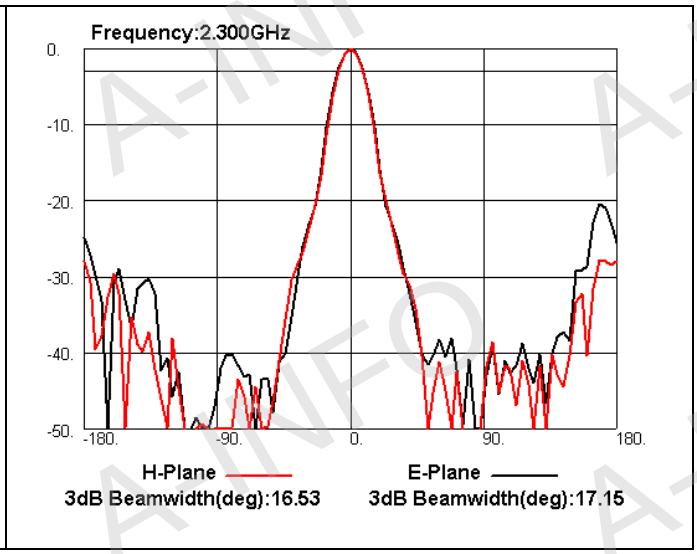


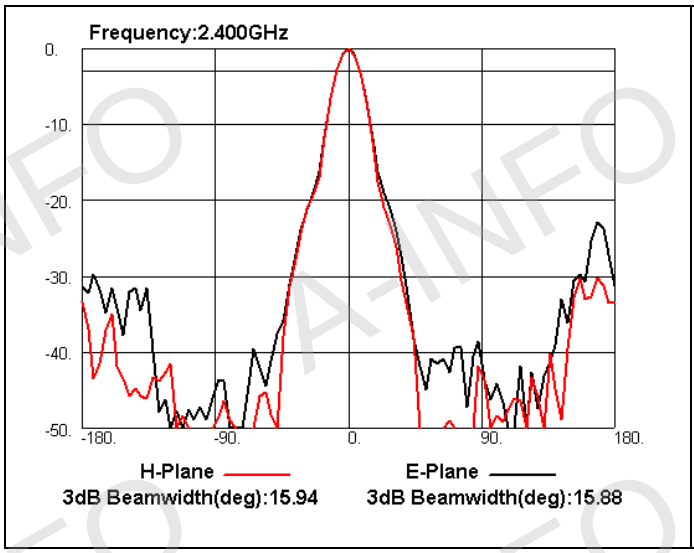


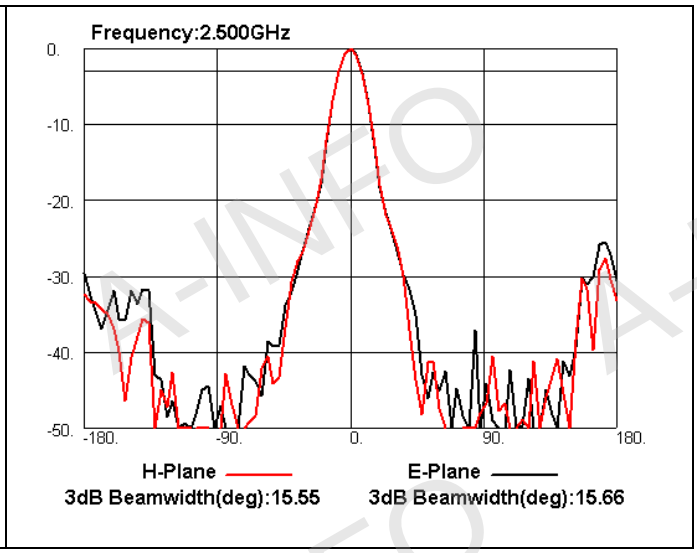


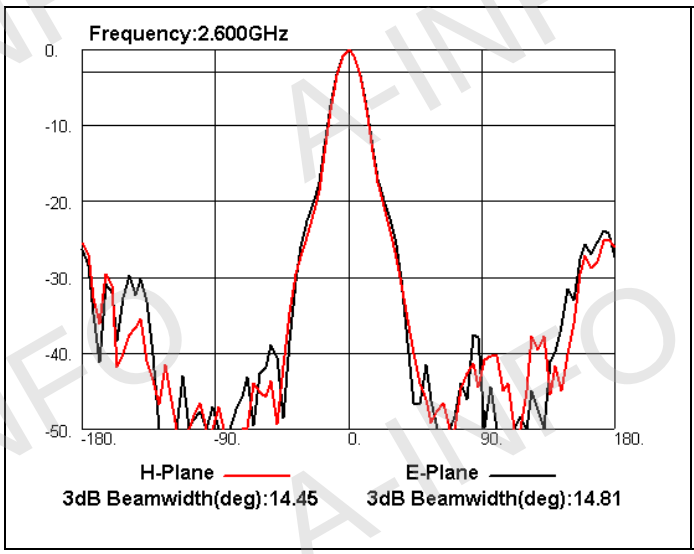


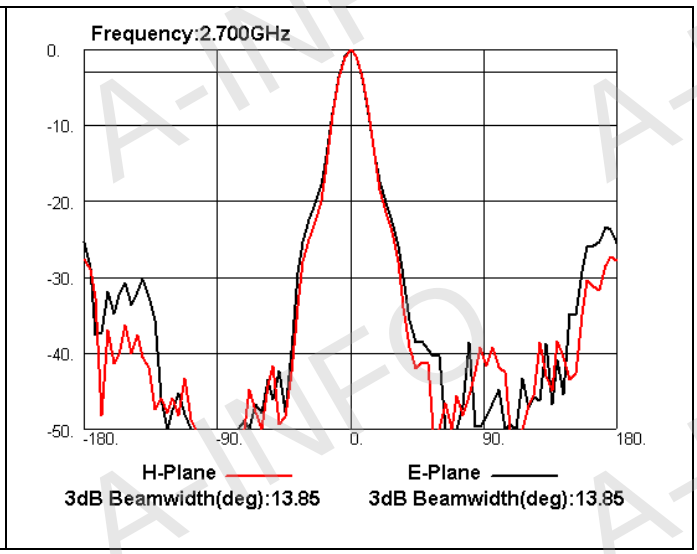



China(Beijing): Tel: (+86) 10-6266-7326, (+86) 10-6266-7327 Fax: (+86) 10-6266-7379
China(Chengdu): Tel: (+86) 28-8519-2786, (+86) 28-8519-3044 Fax: (+86) 28-8519-3068
USA : Tel: (+1) 949-639-9688, (+1) 949-639-9608 Fax: (+1) 949-639-9670
Website: www.ainfoinc.com
Email: sales@ainfoinc.com
Data subject to change without notice. For current data sheets, please contact: Sales@ainfoinc.com

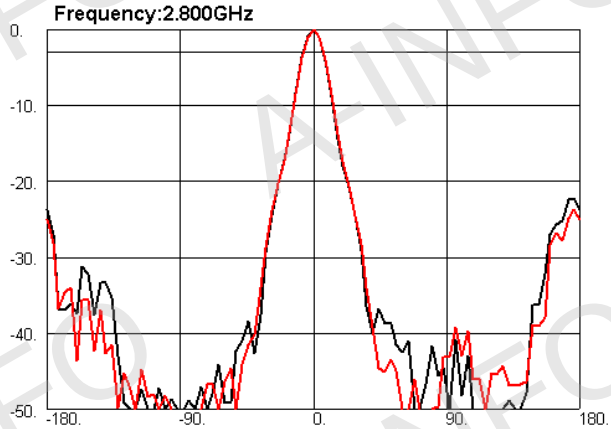


H-Plane
3dB Beamwidth(deg):13.52
E-Plane
3dB Beamwidth(deg):13.59

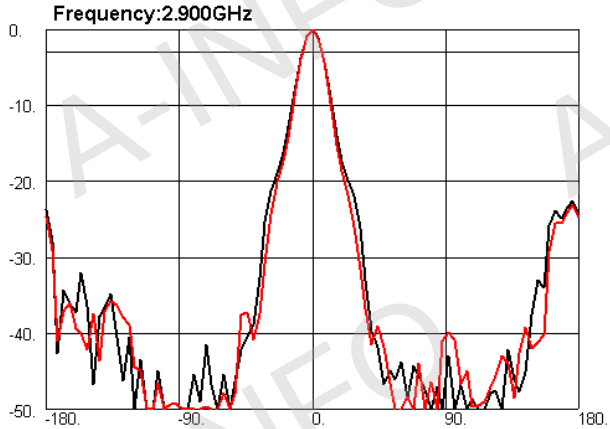


H-Plane
3dB Beamwidth(deg):13.01
E-Plane
3dB Beamwidth(deg):13.35

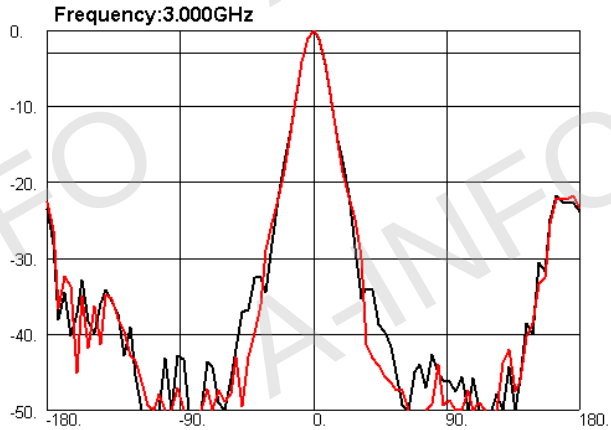


H-Plane
3dB Beamwidth(deg):12.87
E-Plane
3dB Beamwidth(deg):12.68

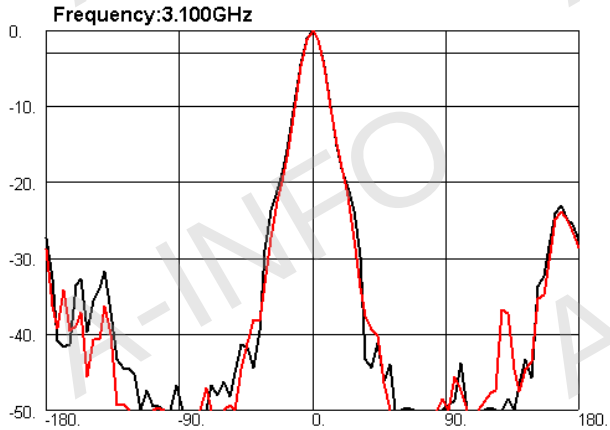


H-Plane
3dB Beamwidth(deg):11.94
E-Plane
3dB Beamwidth(deg):12.43

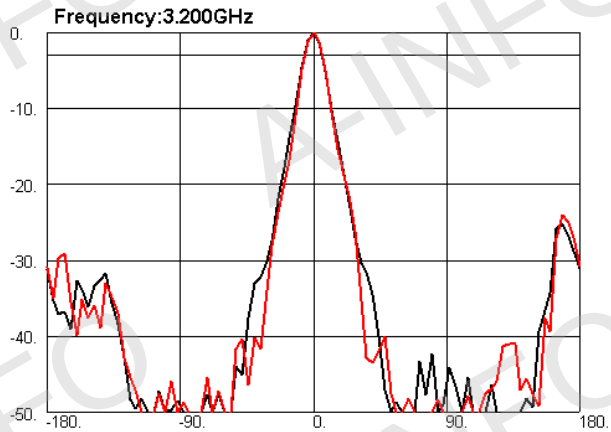


H-Plane
3dB Beamwidth(deg):11.76
E-Plane
3dB Beamwidth(deg):11.91

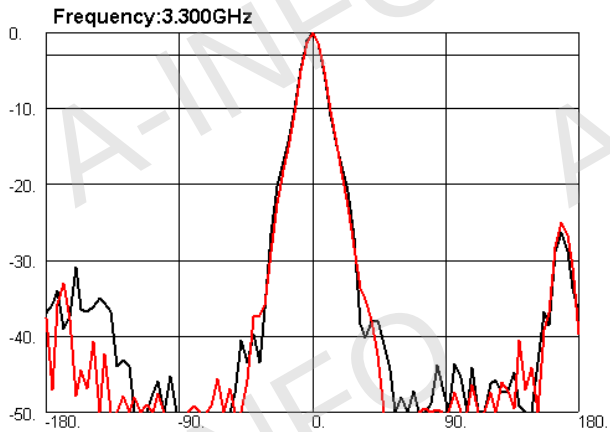


H-Plane
3dB Beamwidth(deg):11.54
E-Plane
3dB Beamwidth(deg):11.61


China(Beijing): Tel: (+86) 10-6266-7326, (+86) 10-6266-7327 Fax: (+86) 10-6266-7379
China(Chengdu): Tel: (+86) 28-8519-2786, (+86) 28-8519-3044 Fax: (+86) 28-8519-3068
USA : Tel: (+1) 949-639-9688, (+1) 949-639-9608 Fax: (+1) 949-639-9670
Website: www.ainfoinc.com
Email: sales@ainfoinc.com
Data subject to change without notice. For current data sheets, please contact: Sales@ainfoinc.com